XAQUABRASS PRESS

UMIX #62313

3-Piece deckmount tub filler with handshower

FEATURES

Solid brass construction
Crystal clear water flow (laminar aerator)
Single volume and temperature lever control
Adjustable temperature limit stop
Pressure balance cartridge
Handshower with 5' double-helix hidden hose
Pull botton diverter at back of spout
1/2" connection

Pressure balance cartridge #ABCA62193

Flow rate:	5.1 gpm - 19L/min
Flow rate handshower:	1.8 gpm - 6.8L/min
Mounting hole:	1 3/8"
Mounting hole mixer:	1-1/2"
Counter depth:	min 1-3/8" max 1-5/8"

FINISHES

Polished chrome (PC)
Electro Black (EBK)
White (WH)
Brushed Nickel PVD (BNVD)
Sunset PVD (SUVD)

CERTIFICATIONS & COMPLIANCE

ASME A112.18.1
CSA B125.1
EPA WaterSense® **(Handshower)**
ADA

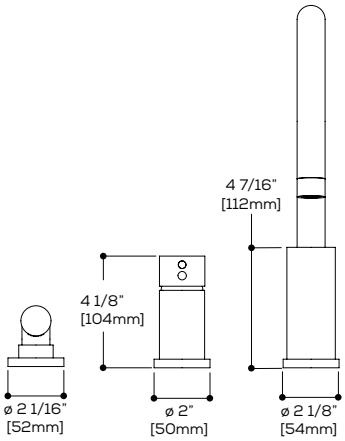

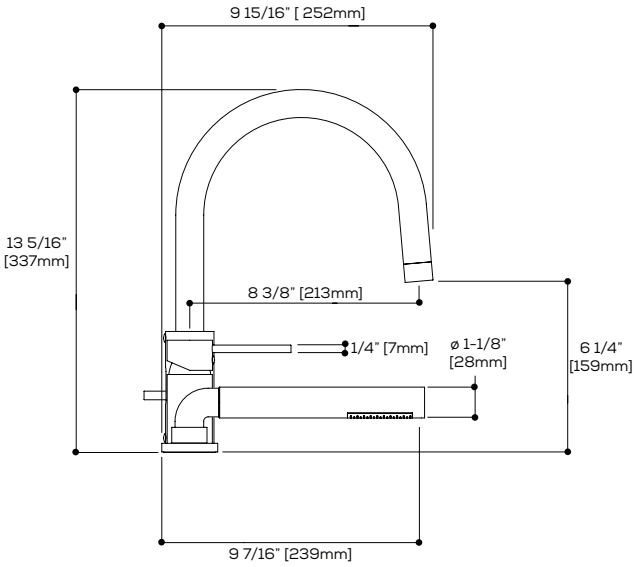

Quick access to warranty and support:

Aquabrass cannot be held responsible for any technical, typographical errors or omissions contained within this document and reserves the right to make changes without prior notice.